domix M6

PINOUT

Domotic Module for smart home & co

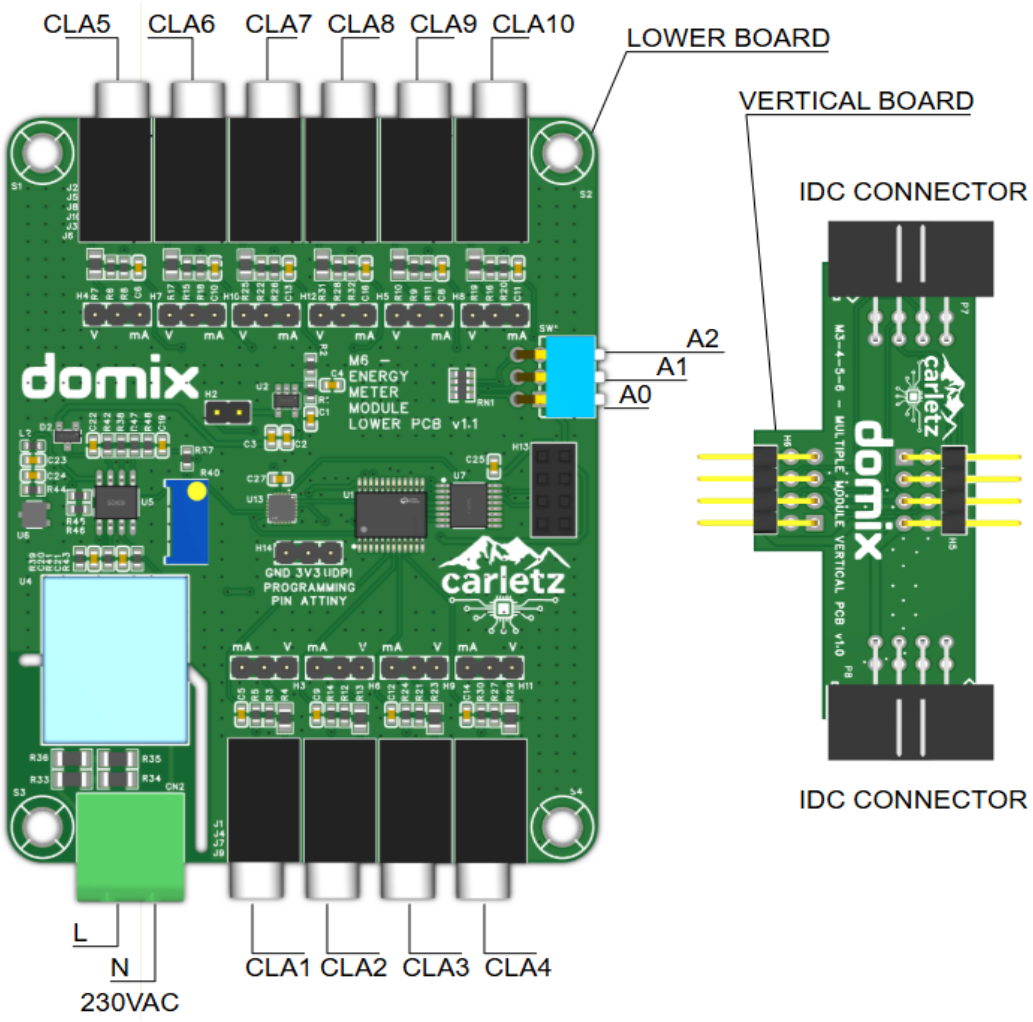

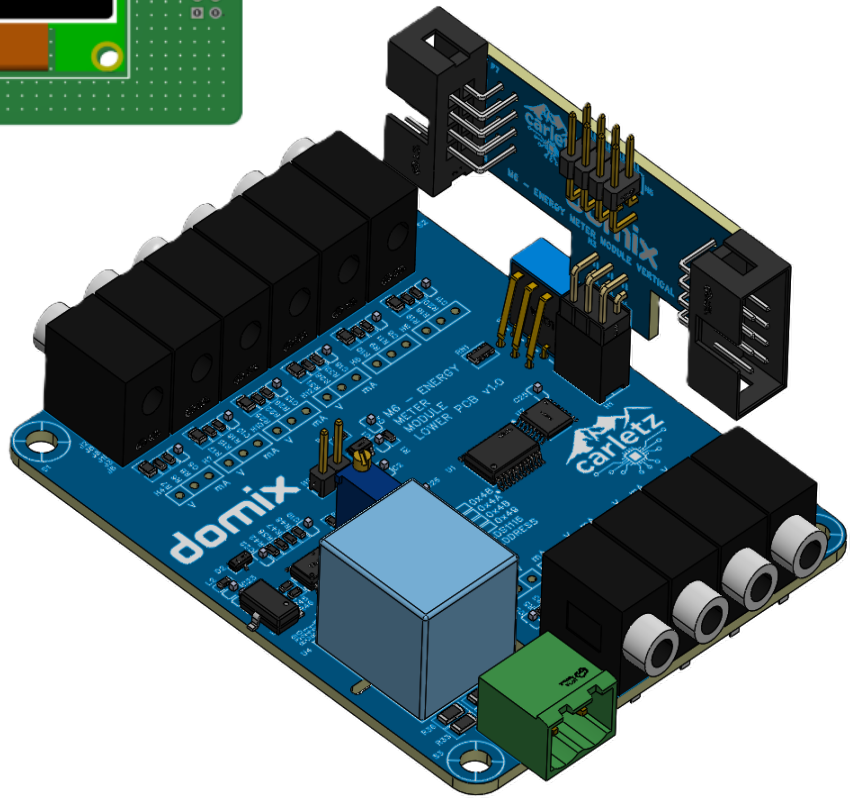

carletz	DOMIX - Domotic module for smart home & co		Create at	2026-01-29	Drawn	carletz
			Update at	2026-03-23	Reviewed	carletz
	Version	Size	Page 1 Total 3	Schematic	M6 - Energy Meter Module		
	1	A4	EasyEDA	Board	M6 - ENERGY	Page	Description

Main Voltage reading

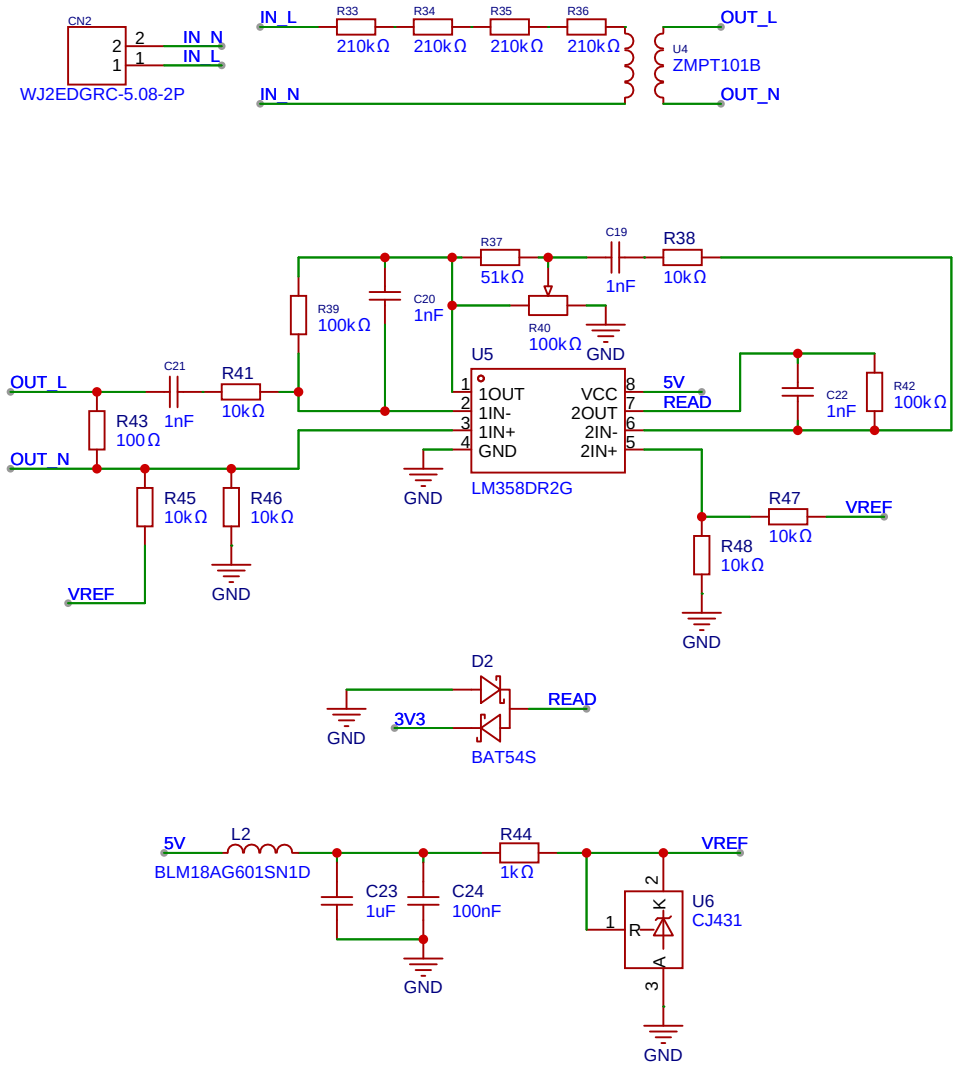

NOTE: Please add C71370 2 pin 5.08 connector to your BOM

I2C

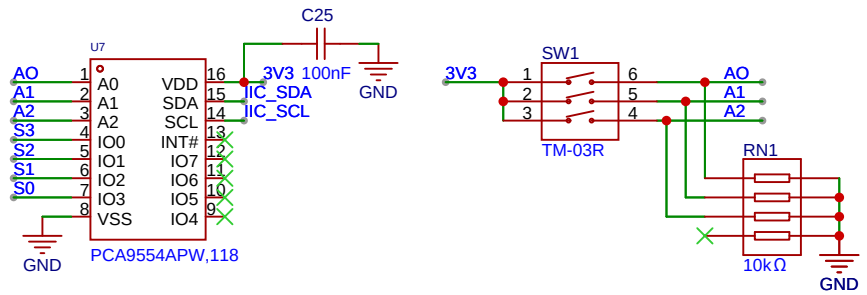

Connector & Miscellanea

DOMIX - Domotic module for smart home & co			Create at	2026-01-29	Drawn	carletz
			Update at	2026-02-25	Reviewed	carletz
Version	Size	Page 2 Total 3	Schematic	M6 - Energy Meter Module		
1	A4	EasyEDA	Board	M6 - ENERGY	Page	Voltage Reading & I2C

Clamp Meter

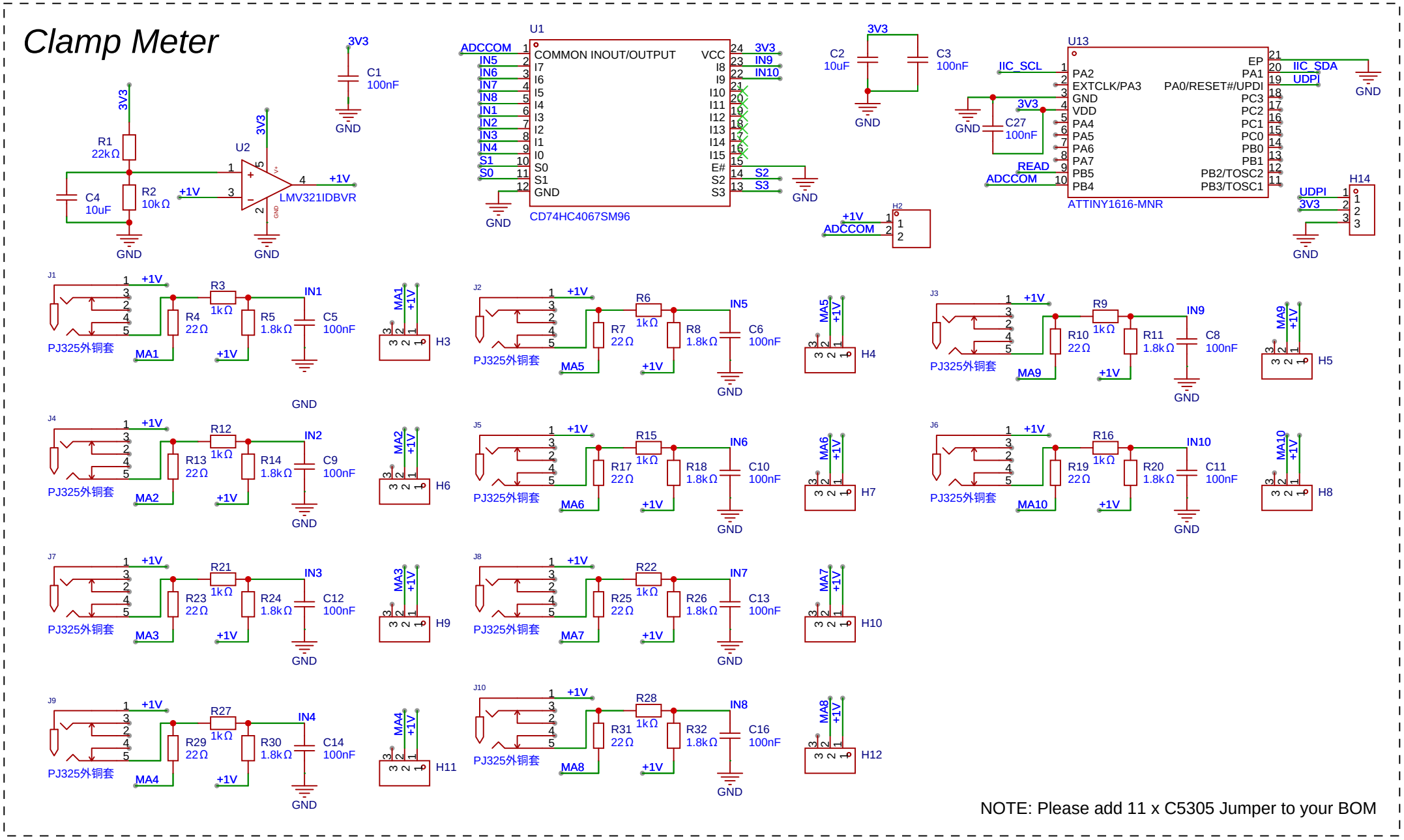

NOTE: Please add 11 x C5305 Jumper to your BOM

carletz	DOMIX - Domotic module for smart home & co		Create at	2026-01-29	Drawn	carletz
			Update at	2026-03-23	Reviewed	carletz
			Schematic	M6 - Energy Meter Module	
	Version	Size	Page 3 Total 3		
	1	A4	EasyEDA	Board	M6 - ENERGY	Page	Clamp Meter